NOTE THIS DRAWING IS FOR GUIDANCE ONLY AND MUST NOT BE USED AS A PROPER WORKING DRAWING. FOR ENQUIRIES ABOUT THE LIFT PLEASE CONTACT Premier Platform Lifts. TEL: 061 922 903

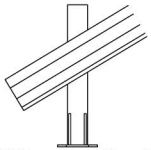

**Stanchion Mounted Rail

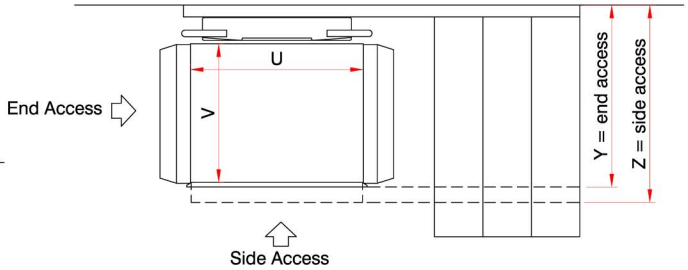

Angle	Headroom Clearance	1250 x 800 Platform Size	1000 x 800 Platform Size	950 x 780 Platform Size
A	B	C	C	C
20°	2000	2045	1795	1745
22°	2000	1980	1730	1680
25°	2000	1915	1665	1585
27°	2000	1870	1620	1570
30°	2000	1825	1575	1525
32°	2000	1790	1540	1490
35°	2000	1760	1510	1460
37°	2000	1740	1490	1440
40°	2000	1710	1460	1410
42°	2000	1690	1440	1390
45°	2000	1670	1420	1370

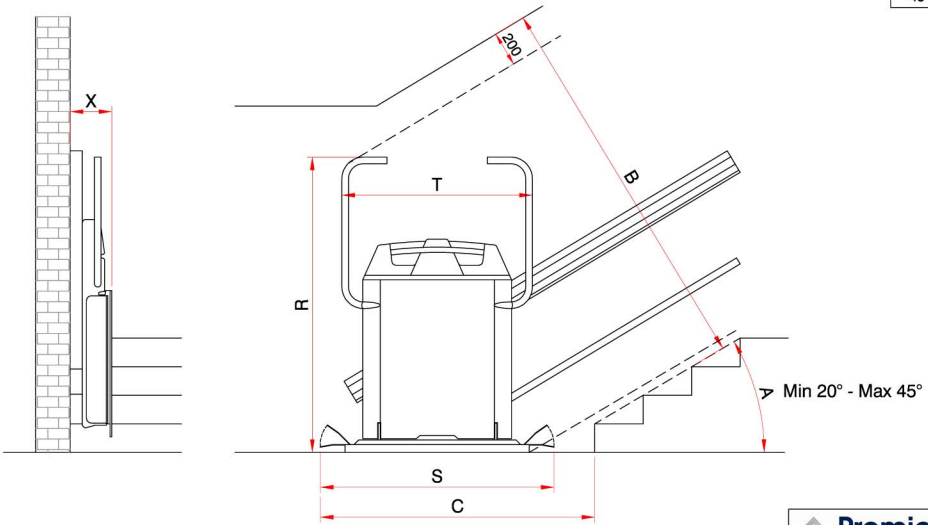

	1250 X 800	1000 X 800	950 X 780
R	1705	1705	1705
S	1600	1350	1300
T	1100	1100	1100
U	1250	1000	950
V	800	800	780
X	300**	300**	300**
Y	1050**	1050**	1030**
Z *	1140**	1140**	1120**

* = Additional side access ramp
** = +70mm for stanchion mounted rail

Stairiser Platform Specification

Load: 230kg / 1 wheelchair
Drive: Rack and Pinion
Speed: 0.01m / sec
Travel: subject to survey
Stops: 2
Motor: 1.1kw
Power: 240v 1ph 50Hz 10A
Colour: RAL 7035 as standard (alternative RAL colours avaliable)

Note - Platform carriage available as a left hand or right hand unit

Premier Platform Lifts
www.lifts.ie
Premier Platform Lifts
Clounty, Mountshannon, Co. Clare, Ireland
Tel: +353 (0)61 922 903
Fax: +353 (0)61 922 904
Email: info@lifts.ie
Web: www.lifts.ie

TITLE	C7 Straight Rail Stairiser		
DWG NO.	230 - C7 STAIRISER		REV A
SCALE NTS	DATE 28/09/06	DRAWN RH	